
PLAYGROUND
one!
playsets
Building Memories
That Last a Lifetime!

Let us show you the way to Safe, Fun Outdoor Play!

For us, being the top playground equipment company means:

- Nothing is more important than the safety of your children
- Only selecting top quality materials for the best and safest in construction and design
- Hiring the best and most passionate designers, engineers and quality control team
- Overseeing every step of the design and manufacturing process
- Ensuring exceptional customer service and a wonderful customer experience
- Constantly adapting to your needs and wants
- Creating equipment that lets your kids and family have a blast — no matter how they play

Join thousands of other Playground One® families and

"go outside and play!"

"We chose Playground One® because of how easy it was to work with our local authorized dealer to add features as our kids and family grew. Now our grandkids love to come visit and play for hours on the same playset we bought for their parents years ago."

— Gma and Gpa Reeves


100%
Pacific
Solid
Cedar

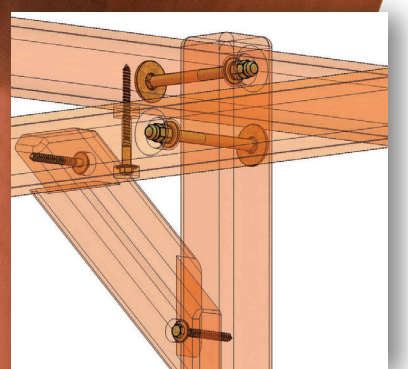

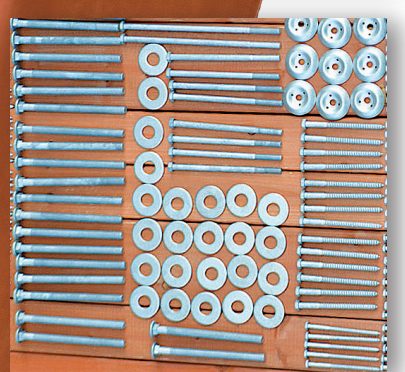

"Don't be fooled! The best and safest materials make a difference."

The Playground One® Difference

Pacific Cedar

Known for its natural strength and durability

1. Naturally resistant to decay and rot
2. Resistant to pest infestations and fungus
3. Does not require harmful or unsafe treatment
4. Used to build fencing, decking, ships and homes

Massive Solid Beam Construction

Resists warping and cracking

1. No layers of vague species of wood glued together
2. No unidentified wood wrapped in plastic that holds in moisture
3. Substantially reduces twisting and cracking
4. No hollow spots to decrease the integrity of the solid beam



Interlocking Multi-Beam Joint Construction

Reduces any type of dangerous sway

1. Bolts are strategically positioned to ensure stability at every angle
2. Creates less stress on hardware
3. Less maintenance
4. More peace of mind

Rust and Corrosion Free Hardware

Oxidized Hot Dipped Galvanized Hardware

1. Three step process ensures rust and corrosion free fasteners throughout
2. Will not flake and "self repairs from scratches"
3. Aesthetically pleasing year after year
4. Half inch diameter bolts

SAFETY FIRST

Playground One® is committed to the highest quality, longest lasting and safest playsets

Interlocking Multi-Beam Joint Construction

Reduces any type of dangerous sway, bolts are strategically positioned to ensure stability at every angle, creates less stress on hardware, and requires less maintenance.

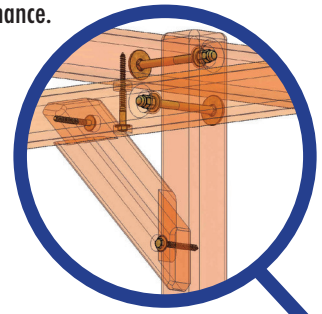

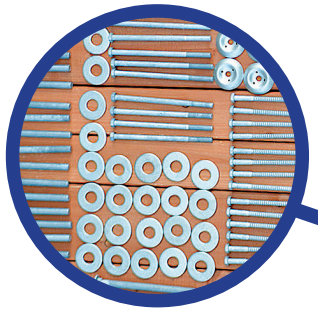

Rust and Corrosion Free Hardware

Oxidized hot dipped galvanized hardware ensures rust and corrosion free fasteners throughout will not flake and "self repairs from scratches."



100% Pacific Solid Cedar

Known for its natural strength and durability, naturally resistant to decay and rot, and resistant to pest infestations and fungus. Massive solid beam construction resists warping and cracking.

Tire Chain Connector Cones

Pinch-free, rubber-dipped, over-sized chains, connected to corrosion and scrape-free industrial sized safety cones.



Pinch-Free Safety Swings

We eliminated sharp edges and pinch points with self-locking industrial connectors that fasten our rubber dipped oversized chains to our swings.



System pictured is 31e Supreme Playcenter Combo 4 from page 31, with Add-On Accessory Arm with Trapeze Bar



Recessed Nuts and Bolts

Pre-drilled pilot holes allow for hidden nuts and bolts to eliminate cuts, scratches and ripped clothing.

#1 in SAFETY

Snag-Free Safety Hardware

We eliminate sharp, protruding attachments so exposed skin won't get scratched and clothing won't get caught.



Double Wall Safety Slides

Require no wood reinforcement and no interior or exterior protruding bolts, making them scratch and splinter free.



360° Trapeze Rings

Rings rotate with natural hand movement for greater grip control.



Non-Slip Gotcha Grips

Every safety handle, handrail, trapeze bar and ladder rung goes through our non-slip "Gotcha" process, and are attached with recessed hardware for even more safety.

Upgrade Any Select or Premier Series Playset to **XL** for a **50%** Bigger Play Deck

Classic Series Excluded



The options are endless.

Playground One!® playsets offer choices that fit your yard, your family and your budget.

Select Series



Select Series	CLASSIC	ORIGINAL	TURBO ORIGINAL
SWING BEAM	3-position — 8′ length	3-position — 10′ length	3-position — 10′ length
PLAY DECK HEIGHT	4′ 10″	5′	5.5′
HEAD ROOM	5.5′	6′	6′
PLAY DECK SIZE	3.5′ x 3.5′ Fort 4′ x 5′ Playcenter	4′ x 5′ Fort 4′ x 6′ Playcenter	4′ x 5′ Fort 4′ x 6′ Playcenter
SLIDE LENGTH	10′	10′	11′
SWING BEAM HEIGHT	7.5′	8′	8.5′
	Forts Page 11 / Playcenters Page 11	Forts Pages 12-13 / Playcenters Pages 14-15	Forts Pages 16-17 / Playcenters Pages 18-19

Premier Series

All the differences that make up the Playground One® Select plus:

- **Thicker Beams**
  Greater stability and durability
- **Wider and Thicker Play Deck Boards**
  Greater stability
- **Higher Play Deck**
  Kids can grow into, not out of, the playset
- **Greater Headroom**
  Room for the whole family to play
- **Thicker Safety Rails**
  More peace of mind
- **Wider Steps on Ladder**
  Safer/easier to climb
- **Greater Space Between Swings**
  Less chance of swinging into others
- **Longer Safety Handles**
  Easier and safer to grip
- **Industrial Grade Hardware**
  Adds stability and longevity
- **Allows for Longer Slides**
  More fun

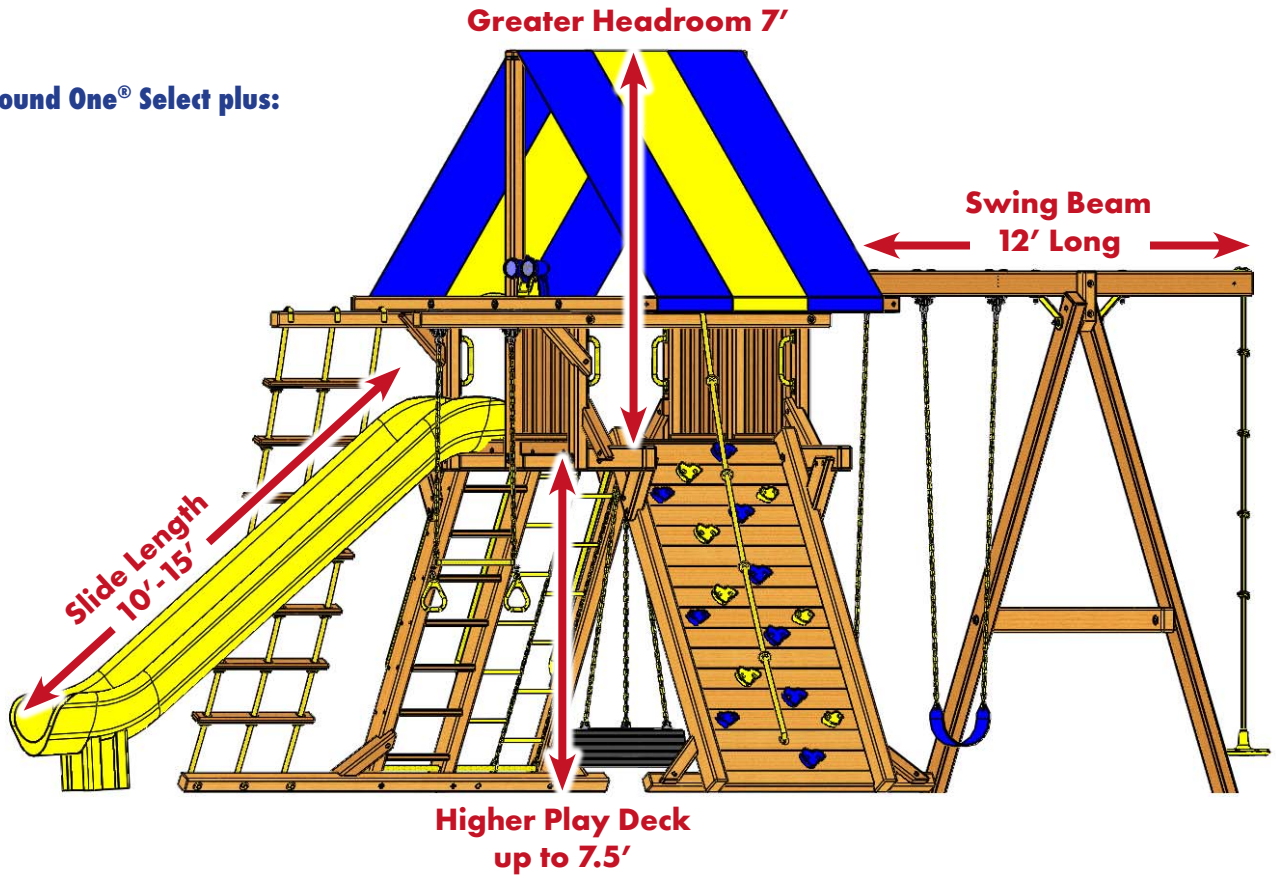

Premier Series	DELUXE	TURBO DELUXE	SUPREME	EXTREME
SWING BEAM	3-position — 12′ length	3-position — 12′ length	3-position — 12′ length	3-position — 12′ length
PLAY DECK HEIGHT	5′	5.5′	6.5′	7.5′
HEAD ROOM	7′	7′	7′	7′
PLAY DECK SIZE	5′ x 5′	5′ x 5′	5′ x 5′	5′ x 7.5′
SLIDE LENGTH	10′	11′	13′	15′
SWING BEAM HEIGHT	8′	8.5′	9.5′	10.5′
	Forts Pages 20-21 / Playcenters Pages 22-23	Forts Pages 24-25 / Playcenters Pages 26-27	Forts Pages 28-29 / Playcenters Pages 30-31	Forts Pages 32-33 / Playcenters Pages 34-35

4 Easy Steps to Customize

STEP 1
CHOOSE A BASE

PLAYGROUND one!



FORT

TRADITIONAL
Square Design



PLAYCENTER

ANGLE
Wide-open Design

STEP 2
CHOOSE A SERIES: Select OR Premier

SEE SERIES DETAILS ON PAGES 6–7

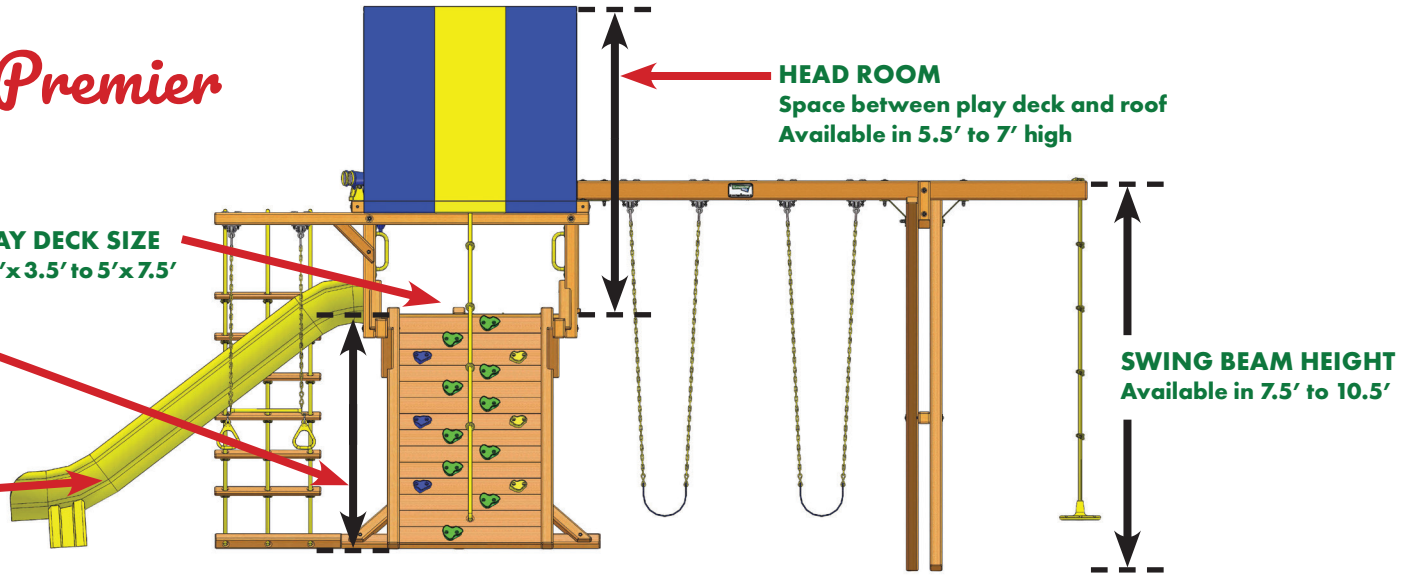

Your Playset

Customizable to provide hours of inspired play in the safety and privacy of your own backyard.

STEP 3
CHOOSE A COMBINATION

COMBO 1
The Base

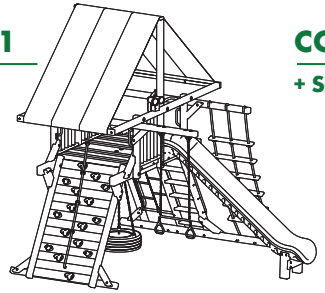

COMBO 2
+ Swing Beam

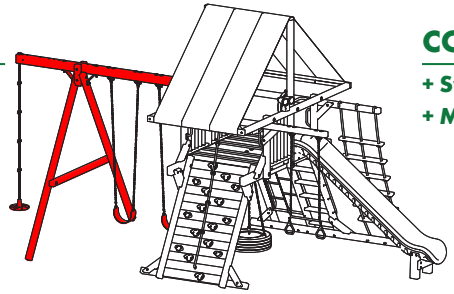

COMBO 3
+ Swing Beam
+ Monkey Bars

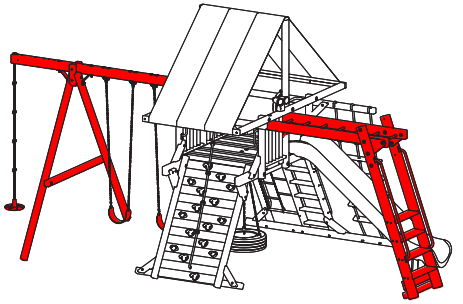

COMBO 4
+ Swing Beam
+ Monkey Bars
+ Sky Loft

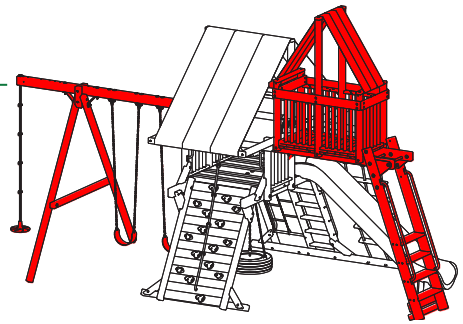

COMBO 5
+ Swing Beam
+ Monkey Bars
+ Sky Loft
+ Extreme Corkscrew Slide

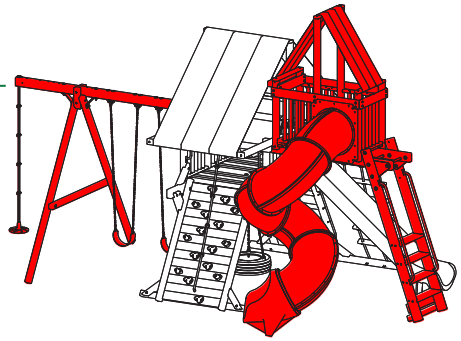

STEP 4
CHOOSE OPTIONS

SEE ALL OPTIONS ON PAGES 42–47



DELUXE GLIDER



FULL BUCKET SWING



DAY DREAMER SWING



DELUXE RAMP



NINJA KIT
(Does not include Monkey Bars)



WOOD ROOF



When you invest in a Playground One!® wooden playset you are making an investment in your child's early childhood development by increasing their:

- **self-confidence**
- **social skills**
- **imagination**
- **physical strength**
- **muscle coordination development**

WHAT TO CONSIDER WHEN DESIGNING A PLAYSET:

Safety: Though fun is the reason you are looking for a playset, SAFETY is the #1 priority. Will it hold up to repeated use as your kids swing, slide, jump and swing some more? Will they have a safety-first design that prevents kids from getting stuck between bars or cutting themselves on sharp bolts? Choosing a playset you know has been professionally engineered and rigorously tested may incur greater resources, but the peace of mind it provides is invaluable.

Age and number of children: Consider how old your children are, and how many children you anticipate playing on the playset. If you have a larger family or anticipate frequent young visitors, you'll need to invest in a playset that has options for multiple children to play at the same time.

Space: Do you have a large or smaller backyard? Is your yard made up of oddly shaped corners or have tree roots sticking up? Is your yard level for the all important "Safety Zone"? All these factors and more will go along way in helping you choose the right Playset for your family.

Features: What will your kids love most? Are they climbers who get onto all your furniture and somersault off? Would they leap headfirst into new adventures, or would a ramp or some steps help them get there with less stress? Thinking about how to customize playground equipment to your kids' abilities and passions will help narrow down some options.

Potential upgrades: Invest in a modular playset you can expand or modify as kids grow up — by swapping out bucket swings for belt swings, for instance, or by when adding a spiral corkscrew slide seems more appealing.

Select Series



CLASSIC FORT

ALL CLASSIC FORTS INCLUDE:

- 3-position swing beam
- 2 belt swings
- 1 Trapeze bar
- Heavy-duty canopy roof
- Rock wall with climbing rope
- Step ladder with handrails
- Multi-purpose picnic table
- Ship's wheel
- Safety handles
- Original wave slide

11a CLASSIC FORT COMBO 2 — L 15′ x W 15′ x H 10.5′

For safety's sake, install your play system on a resilient surface and allow a 6 foot play perimeter around the entire surface.

Play Deck Height: **4′10″** | Headroom: **5.5′** | Play Deck Size: **3.5′ x 3.5′** | Slide Length: **10′** | Swing Beam Height: **7.5′**

Select Series



CLASSIC PLAYCENTER

ALL CLASSIC PLAYCENTERS INCLUDE:

- 3-position swing beam
- 2 belt swings
- 1 trapeze bar
- Heavy-duty canopy roof
- Rockwall with climbing rope
- Rope ladder
- Step/rung ladder with handrails
- Ship's wheel
- Safety handles
- Original wave slide

11b CLASSIC PLAYCENTER COMBO 2 — L 19′ x W 11′ x H 10.5′

For safety's sake, install your play system on a resilient surface and allow a 6 foot play perimeter around the entire surface.

Play Deck Height: **4′10″** | Headroom: **5.5′** | Play Deck Size: **4′ x 5′** | Slide Length: **10′** | Swing Beam Height: **7.5′**

Select Series

ORIGINAL FORT



ALL ORIGINAL FORTS INCLUDE:

- 3-position swing beam
- 2 belt swings
- 1 trapeze bar
- Heavy-duty canopy roof
- Rock wall with climbing rope
- Step ladder with handrails
- Multi-purpose picnic table
- Ship's wheel
- Safety handles
- Original wave slide

12a ORIGINAL FORT COMBO 2 — L 18′ x W 16′ x H 11′

For safety's sake, install your play system on a resilient surface and allow a 6 foot play perimeter around the entire surface.

Play Deck Height: **5′** | Headroom: **6′** | Play Deck Size: **4′ x 5′** | Slide Length: **10′** | Swing Beam Height: **8′**

ORIGINAL FORT

13a Original Fort Combo 2 with Accessory Arm

L 18′ x W 16′ x H 11′

ADD-ONS INCLUDED:
- Accessory Arm
- Rope with Disc Swing



13b Original Fort Combo 2 with Deluxe Ramp

L 18′ x W 16′ x H 11′

ADD-ONS INCLUDED:
- Deluxe Ramp



13c Original Fort Combo 2 XL

L 20.5′ x W 16′ x H 11′

ADD-ONS INCLUDED:
- 50% Bigger Play Deck

50% Bigger Play Deck



13d Original Fort Combo 2 XL with Wood Roof

L 20.5′ x W 16′ x H 11′

ADD-ONS INCLUDED:
- 50% Bigger Play Deck
- Wood roof (replaces canopy)



13e Original Fort Combo 3

L 18′ x W 16′ x H 11′

ADD-ONS INCLUDED:
- Monkey bars



13f Original Fort Hangout

L 17.5′ x W 16′ x H 11′

ADD-ONS INCLUDED:
- Wood roof (replaces canopy)
- Cafe table
- Lower level enclosure with floor



EXTRA FUN
ADD-ONS AVAILABLE:



SKY LOFT WITH CANOPY ROOF



LOWER LEVEL ENCLOSURE
includes floor and entry door



EXTREME CORKSCREW SLIDE



DELUXE MONKEY BARS

SEE ALL OPTIONS
STARTING ON PAGE 42

Select Series

ORIGINAL PLAYCENTER

ALL ORIGINAL PLAYCENTERS INCLUDE:

- 3-position swing beam
- 2 belt swings
- 1 rope with disc swing
- Heavy-duty canopy roof
- Accessory arm with trapeze bar
- Rock wall with climbing rope
- Rope ladder
- Step/rung ladder with handrails
- 360° tire swing
- Ship's wheel
- Safety handles
- Original wave slide



14a ORIGINAL PLAYCENTER COMBO 2 — L 22' x W 12' x H 11'

For safety's sake, install your play system on a resilient surface and allow a 6 foot play perimeter around the entire surface.

Play Deck Height: **5'** | Headroom: **6'** | Play Deck Size: **4' x 6'** | Slide Length: **10'** | Swing Beam Height: **8'**

ORIGINAL PLAYCENTER

15a Original Playcenter Combo 2 XL

L 22′ x W 15′ x H 11′

ADD-ONS INCLUDED:
- 50% Bigger Play Deck



15b Original Playcenter Combo 2 with Wood Roof

L 22′ x W 12′ x H 11′

ADD-ONS INCLUDED:
- Wood roof (replaces canopy)



15c Original Playcenter Combo 3

L 22′ x W 12′ x H 11′

ADD-ONS INCLUDED:
- Monkey bars



15d Original Playcenter Combo 3 with Wood Roof

L 22′ x W 12′ x H 11′

ADD-ONS INCLUDED:
- Wood roof (replaces canopy)
- Monkey bars



15e Original Playcenter Combo 4

L 22′ x W 16.5′ x H 14.5′

ADD-ONS INCLUDED:
- Monkey bars
- Sky loft with canopy roof



15f Original Playcenter Combo 5

L 22′ x W 16.5′ x H 14.5′

ADD-ONS INCLUDED:
- Monkey bars
- Sky loft with canopy roof
- Extreme corkscrew slide



EXTRA FUN
ADD-ONS AVAILABLE:



SKY LOFT WITH CANOPY ROOF



NINJA TRAINING KIT



HAND CRANK SPOTLIGHT



FIREMAN'S POLE

SEE ALL OPTIONS
STARTING ON PAGE 42

Select Series

TURBO ORIGINAL FORT



ALL TURBO ORIGINAL FORTS INCLUDE:

- 3-position swing beam
- 2 belt swings
- 1 trapeze bar
- Heavy-duty canopy roof
- Rock wall with climbing rope
- Step ladder with handrails
- Multi-purpose picnic table
- Ship's wheel
- Safety handles
- Turbo slide

16a TURBO ORIGINAL FORT COMBO 2 — L 18.5′ x W 17′ x H 11.5′

For safety's sake, install your play system on a resilient surface and allow a 6 foot play perimeter around the entire surface.

Play Deck Height: **5.5′** | Headroom: **6′** | Play Deck Size: **4′ x 5′** | Slide Length: **11′** | Swing Beam Height: **8.5′**

TURBO ORIGINAL FORT

17a Turbo Original Fort Extreme

L 21′ x W 26′ x H 15′

ADD-ONS INCLUDED:
- Sky lounge tower with canopy roof
- Extreme 3-position swing beam (swap)
- Extreme super ride slide (swap)
- 1 rope with disc swing (replaces trapeze bar)

NEW



17b Turbo Original Fort Combo 2 with Wood Roof

L 18.5′ x W 17′ x H 11.5′

ADD-ONS INCLUDED:
- Wood roof (replaces canopy)



17c Turbo Original Fort Combo 3

L 18.5′ x W 17′ x H 11.5′

ADD-ONS INCLUDED:
- Monkey bars



50% Bigger Play Deck

17d Turbo Original Fort Combo 2 XL

L 21′ x W 17′ x H 11.5′

ADD-ONS INCLUDED:
- 50% Bigger Play Deck
- Wood roof (replaces canopy)



17e Turbo Original Fort Combo 2 XL with Playhouse

L 21′ x W 17′ x H 11.5′

ADD-ONS INCLUDED:
- 50% Bigger Play Deck
- Wood roof (replaces canopy)
- Lower level enclosure with floor



50% Bigger Play Deck

17f Turbo Original Fort Hangout

L 18′ x W 17′ x H 11.5′

ADD-ONS INCLUDED:
- Wood roof (replaces canopy)
- Cafe table
- Lower level enclosure with floor



EXTRA FUN ADD-ONS AVAILABLE:



SKY LOFT WITH CANOPY ROOF



LOWER LEVEL ENCLOSURE
includes floor and entry door



EXTREME CORKSCREW SLIDE



DELUXE RAMP

SEE ALL OPTIONS
STARTING ON PAGE 42

Select Series

TURBO ORIGINAL PLAYCENTER



ALL TURBO ORIGINAL PLAYCENTERS INCLUDE:

- 3-position swing beam
- 2 belt swings
- 1 rope with disc swing
- Accessory arm with trapeze bar
- Heavy duty canopy roof
- Rock wall with climbing rope
- Rope ladder
- Step/rung ladder with handrails
- 360° tire swing
- Ship's wheel
- Safety handles
- Turbo slide

18a TURBO ORIGINAL PLAYCENTER COMBO 2 — L 23' x W 12.5' x H 11.5'

For safety's sake, install your play system on a resilient surface and allow a 6 foot play perimeter around the entire surface.

Play Deck Height: **5.5'** | Headroom: **6'** | Play Deck Size: **4' x 6'** | Slide Length: **11'** | Swing Beam Height: **8.5'**

TURBO ORIGINAL PLAYCENTER

19a Turbo Original Playcenter Combo 2 XL

L 23′ x W 15.5′ x H 11.5′

ADD-ONS INCLUDED:
- 50% Bigger Play Deck

50% Bigger Play Deck



19b Turbo Original Playcenter Combo 2 with Wood Roof

L 23′ x W 12.5′ x H 11.5′

ADD-ONS INCLUDED:
- Wood roof (replaces canopy)



19c Turbo Original Playcenter Combo 3

L 23′ x W 12.5′ x H 11.5′

ADD-ONS INCLUDED:
- Monkey bars



19d Turbo Original Playcenter Combo 4

L 23′ x W 12.5′ x H 15′

ADD-ONS INCLUDED:
- Monkey bars
- Sky loft with canopy roof



19e Turbo Original Playcenter Combo 5

L 23′ x W 15′ x H 15′

ADD-ONS INCLUDED:
- Monkey bars
- Sky loft with canopy roof
- Extreme corkscrew slide



19f Turbo Original Playcenter Combo 2 with Sky Lounge Tower

L 30′ x W 12.5′ x H 15′

ADD-ONS INCLUDED:
- Sky lounge tower with canopy roof
- Extreme super ride slide (swap)

NEW



EXTRA FUN ADD-ONS AVAILABLE:



DUAL MONKEY BARS



WOOD ROOF



TIC-TAC-TOE PANEL



SKY LOFT WITH CANOPY ROOF

SEE ALL OPTIONS STARTING ON PAGE 42

Premier Series

- Thicker Beams
- Extra Long Swing Beam
- Greater Headroom
- Beefier Ladder and A-frame Legs
- Wider Play Deck Boards
- Framed Rockwall
- Larger Commercial Grade Hardware

DELUXE FORT



ALL DELUXE FORTS INCLUDE:

- 3-position swing beam
- 2 belt swings
- 1 rope with disc swing
- Accessory arm with trapeze bar
- Heavy-duty canopy roof
- Rock wall with climbing rope
- Step ladder with handrails
- Grip-n-go bar
- Ship's wheel
- Binoculars
- Safety handles
- Original wave slide

20a DELUXE FORT COMBO 2 — L 20′ x W 17′ x H 12′

For safety's sake, install your play system on a resilient surface and allow a 6 foot play perimeter around the entire surface.

Play Deck Height: **5′** | Headroom: **7′** | Play Deck Size: **5′ x 5′** | Slide Length: **10′** | Swing Beam Height: **8′**

DELUXE FORT

21a Deluxe Fort Combo 3
L 20′ x W 17′ x H 12′

ADD-ONS INCLUDED:
- Monkey bars



21b Deluxe Fort XL
L 20′ x W 19.5′ x H 12′

ADD-ONS INCLUDED:
- 50% Bigger Play Deck
- Multi-Purpose Picnic Table



21c Deluxe Fort Combo 3 with Playhouse
L 20′ x W 17′ x H 12′

ADD-ONS INCLUDED:
- Wood roof (replaces canopy)
- Monkey bars
- Lower level enclosure with floor



21d Deluxe Fort Hangout
L 19′ x W 17′ x H 12′

ADD-ONS INCLUDED:
- Wood roof (replaces canopy)
- Lower level playhouse with floor
- Café table



Accessory arm with trapeze not included

21e Deluxe Fort Combo 4
L 20′ x W 17′ x H 14.5′

ADD-ONS INCLUDED:
- Monkey bars
- Sky loft with canopy roof



21f Deluxe Fort Combo 5
L 22′ x W 17′ x H 14.5′

ADD-ONS INCLUDED:
- Monkey bars
- Sky loft with canopy roof
- Extreme corkscrew slide



EXTRA FUN
ADD-ONS AVAILABLE:



SKY LOFT WITH CANOPY ROOF



WOOD ROOF



LOWER LEVEL ENCLOSURE
includes floor and entry door



SKY LOUNGE WITH TOWER KIT

SEE ALL OPTIONS
STARTING ON PAGE 42

Premier Series

- Thicker Beams
- Extra Long Swing Beam
- Greater Headroom
- Beefier Ladder and A-frame Legs
- Wider Play Deck Boards
- Framed Rockwall
- Larger Commercial Grade Hardware

DELUXE PLAYCENTER



ALL DELUXE PLAYCENTERS INCLUDE:

- 3-position swing beam
- 2 belt swings
- 1 rope with disc swing
- Accessory arm with trapeze bar
- Heavy-duty canopy roof
- Rock wall with climbing rope
- Rope ladder
- Step/chain ladder with handrails
- 360° tire swing
- Grip-n-go bar
- Ship's wheel
- Binoculars
- Safety handles
- Original wave slide

22a DELUXE PLAYCENTER COMBO 2 — L 24′ x W 12.5′ x H 12′

For safety's sake, install your play system on a resilient surface and allow a 6 foot play perimeter around the entire surface.

Play Deck Height: **5′** | Headroom: **7′** | Play Deck Size: **5′ x 5′** | Slide Length: **10′** | Swing Beam Height: **8′**

DELUXE PLAYCENTER

23a Deluxe Playcenter Combo 2
L 24′ x W 12.5′ x H 12′



23b Deluxe Playcenter Combo 2 with Wood Roof
L 24′ x W 12.5′ x H 12′

ADD-ONS INCLUDED:
- Wood roof (replaces canopy)



23c Deluxe Playcenter Combo 3
L 24′ x W 12.5′ x H 12′

ADD-ONS INCLUDED:
- Monkey bars



23d Deluxe Playcenter Combo 2 XL
L 24′ x W 15′ x H 12′

ADD-ONS INCLUDED:
- 50% Bigger Play Deck

50% Bigger Play Deck



23e Deluxe Playcenter Combo 4
L 24′ x W 12.5′ x H 15′

ADD-ONS INCLUDED:
- Monkey bars
- Sky loft with canopy roof



23f Deluxe Playcenter Combo 5
L 24′ x W 14.5′ x H 15′

ADD-ONS INCLUDED:
- Monkey bars
- Sky loft with canopy roof
- Extreme corkscrew slide



EXTRA FUN
ADD-ONS AVAILABLE:



360° DAY DREAMER SWING (40″)



WOOD ROOF



HAND CRANK SPOTLIGHT



NINJA TRAINING KIT



SKY LOUNGE WITH WOOD ROOF

SEE ALL OPTIONS
STARTING ON PAGE 42

Premier Series

- Thicker Beams
- Extra Long Swing Beam
- Greater Headroom
- Beefier Ladder and A-frame Legs
- Wider Play Deck Boards
- Framed Rockwall
- Larger Commercial Grade Hardware

TURBO DELUXE FORT



ALL TURBO DELUXE FORTS INCLUDE:

- 3-position swing beam
- 2 belt swings
- 1 rope with disc swing
- Accessory arm with trapeze bar
- Heavy-duty canopy roof
- Rock wall with climbing rope
- Step ladder with handrails
- Grip-n-go bar
- Ship's wheel
- Binoculars
- Safety handles
- Turbo slide

24a TURBO DELUXE FORT COMBO 2 — L 20′ x W 18′ x H 12.5′

For safety's sake, install your play system on a resilient surface and allow a 6 foot play perimeter around the entire surface.

Play Deck Height: **5.5′** | Headroom: **7′** | Play Deck Size: **5′ x 5′** | Slide Length: **11′** | Swing Beam Height: **8.5′**

TURBO DELUXE FORT

25a Turbo Deluxe Fort Combo 3
L 20′ x W 18′ x H 12.5′

ADD-ONS INCLUDED:
- Monkey bars



25b Turbo Deluxe Fort XL
L 20′ x W 20.5′ x H 12.5′

50% Bigger Play Deck

ADD-ONS INCLUDED:
- 50% Bigger Play Deck
- Multi-Purpose Picnic Table



25c Turbo Deluxe Fort Combo 3 with Playhouse
L 20′ x W 18′ x H 12.5′

ADD-ONS INCLUDED:
- Wood roof (replaces canopy)
- Monkey bars
- Lower level playhouse with floor



25d Turbo Deluxe Fort Hangout
L 19′ x W 17′ x H 12.5′

ADD-ONS INCLUDED:
- Café table
- Lower level playhouse with floor
- Wood roof (replaces canopy)



Accessory arm with trapeze not included

25e Turbo Deluxe Fort Super Combo 4
L 23′ x W 29′ x H 15′

ADD-ONS INCLUDED:
- Wood roof (replaces canopy)
- Dual monkey bars
- Sky lounge with wood roof
- Extreme super ride slide



NEW

25f Turbo Deluxe Fort Combo 5
L 22′ x W 18′ x H 15′

ADD-ONS INCLUDED:
- Monkey bars
- Sky loft with canopy roof
- Extreme corkscrew slide



EXTRA FUN
ADD-ONS AVAILABLE:



SKY LOFT WITH CANOPY ROOF



DELUXE RAMP



LOWER LEVEL ENCLOSURE
includes floor and entry door



NEW

FIREMAN'S POLE

SEE ALL OPTIONS
STARTING ON PAGE 42

Premier Series

- Thicker Beams
- Extra Long Swing Beam
- Greater Headroom
- Beefier Ladder and A-frame Legs
- Wider Play Deck Boards
- Framed Rockwall
- Larger Commercial Grade Hardware

TURBO DELUXE PLAYCENTER

ALL TURBO DELUXE PLAYCENTERS INCLUDE:

- 3-position swing beam
- 2 belt swings
- 1 rope with disc swing
- Accessory arm with trapeze bar
- Heavy-duty canopy roof
- Step/chain ladder with handrails
- Rock wall with climbing rope
- Rope ladder
- 360° tire swing
- Grip-n-go bar
- Ship's wheel
- Safety handles
- Turbo slide



26a TURBO DELUXE PLAYCENTER COMBO 2 — L 25' x W 13' x H 12.5'

For safety's sake, install your play system on a resilient surface and allow a 6 foot play perimeter around the entire surface.

Play Deck Height: **5.5'** | Headroom: **7'** | Play Deck Size: **5' x 5'** | Slide Length: **11'** | Swing Beam Height: **8.5'**

TURBO DELUXE PLAYCENTER

27a Turbo Deluxe Playcenter Combo 2

L 25′ x W 13′ x H 12.5′



27b Turbo Deluxe Playcenter Combo 2 with Wood Roof

L 25′ x W 13′ x H 12.5′

ADD-ONS INCLUDED:
- Wood roof (replaces canopy)



27c Turbo Deluxe Playcenter Combo 3

L 25′ x W 13′ x H 12.5′

ADD-ONS INCLUDED:
- Monkey bars



27d Turbo Deluxe Playcenter Combo 2 XL

50% Bigger Play Deck

L 25′ x W 15.5′ x H 12.5′

ADD-ONS INCLUDED:
- 50% Bigger Play Deck



27e Turbo Deluxe Playcenter Super Combo 4

L 25′ x W 19′ x H 15′

ADD-ONS INCLUDED:
- Dual monkey bars
- Sky lounge with canopy roof
- Extreme super ride slide (swap)



NEW

27f Turbo Deluxe Playcenter Combo 5

L 25′ x W 15′ x H 15′

ADD-ONS INCLUDED:
- Monkey bars
- Sky loft with canopy roof
- Extreme corkscrew slide



EXTRA FUN ADD-ONS AVAILABLE:



360° DAY DREAMER SWING (40″)



WOOD ROOF



TIC-TAC-TOE PANEL



SKY LOUNGE WITH TOWER KIT

SEE ALL OPTIONS STARTING ON PAGE 42

Premier Series

- Thicker Beams
- Extra Long Swing Beam
- Greater Headroom
- Beefier Ladder and A-frame Legs
- Wider Play Deck Boards
- Framed Rockwall
- Larger Commercial Grade Hardware

SUPREME FORT

ALL SUPREME FORTS INCLUDE:

- 3-position swing beam
- 2 belt swings
- 1 rope with disc swing
- Accessory arm with trapeze bar
- Heavy-duty canopy roof
- Rock wall with climbing rope
- Step ladder with handrails
- Grip-n-go bar
- Binoculars
- Ship's wheel
- Safety handles
- Supreme super ride slide



28a SUPREME FORT COMBO 2 — L 20′ x W 19′ x H 13.5′

For safety's sake, install your play system on a resilient surface and allow a 6 foot play perimeter around the entire surface.

Play Deck Height: **6.5′** | Headroom: **7′** | Play Deck Size: **5′ x 5′** | Slide Length: **13′** | Swing Beam Height: **9.5′**

SUPREME FORT

29a Supreme Fort Combo 2
L 20′ x W 19′ x H 13.5′



29b Supreme Fort Combo 3
L 20′ x W 19′ x H 13.5′

ADD-ONS INCLUDED:
- Monkey bars



29c Supreme Fort Combo 2 XL
L 20′ x W 21.5′ x H 13.5′

50% Bigger Play Deck

ADD-ONS INCLUDED:
- 50% Bigger Play Deck
- Gabled wood roof (replaces canopy)
- Multi-Purpose Picnic Table



29d Supreme Fort Hangout
L 19′ x W 19′ x H 13.5′

ADD-ONS INCLUDED:
- Wood roof (replaces canopy)
- Lower level playhouse with floor
- Café table



Accessory arm with trapeze not included

29e Supreme Fort Combo 4
L 20′ x W 19′ x H 14′

ADD-ONS INCLUDED:
- Monkey bars
- Sky loft with canopy roof



29f Supreme Fort Combo 5
L 22′ x W 19′ x H 14′

ADD-ONS INCLUDED:
- Monkey bars
- Sky loft with canopy roof
- Extreme corkscrew slide



EXTRA FUN
ADD-ONS AVAILABLE:



SKY LOFT WITH CANOPY ROOF



DELUXE RAMP



LOWER LEVEL ENCLOSURE
includes floor and entry door



FIREMAN'S POLE

SEE ALL OPTIONS
STARTING ON PAGE 42

Premier Series

- Thicker Beams
- Extra Long Swing Beam
- Greater Headroom
- Beefier Ladder and A-frame Legs
- Wider Play Deck Boards
- Framed Rockwall
- Larger Commercial Grade Hardware

SUPREME PLAYCENTER

ALL SUPREME PLAYCENTERS INCLUDE:

- 3-position swing beam
- 2 belt swings
- 1 rope with disc swing
- Accessory arm with trapeze bar
- Heavy-duty canopy roof
- Rock wall with climbing rope
- Rope ladder
- Step/chain ladder with handrails
- 360° tire swing
- Grip-n-go bar
- Binoculars
- Ship's wheel
- Safety handles
- Supreme super ride slide



30a SUPREME PLAYCENTER COMBO 2 — L 26' x W 14' x H 13.5'

For safety's sake, install your play system on a resilient surface and allow a 6 foot play perimeter around the entire surface.

Play Deck Height: **6.5'** | Headroom: **7'** | Play Deck Size: **5' x 5'** | Slide Length: **13'** | Swing Beam Height: **9.5'**

SUPREME PLAYCENTER

31a Supreme Playcenter Combo 2

L 26′ x W 14′ x H 13.5′



31b Supreme Playcenter Combo 2 with Wood Roof

L 26′ x W 14′ x H 13.5′

ADD-ONS INCLUDED:
- Wood roof (replaces canopy)



31c Supreme Playcenter Combo 2 XL

L 26′ x W 16.5′ x H 13.5′

50% Bigger Play Deck

ADD-ONS INCLUDED:
- 50% Bigger Play Deck



31d Supreme Playcenter Combo 3

L 26′ x W 14′ x H 13.5′

ADD-ONS INCLUDED:
- Monkey bars



31e Supreme Playcenter Combo 4

L 26′ x W 14′ x H 14′

ADD-ONS INCLUDED:
- Monkey bars
- Sky loft with canopy roof



31f Supreme Playcenter Combo 5

L 26′ x W 16′ x H 14′

ADD-ONS INCLUDED:
- Monkey bars
- Sky loft with canopy roof
- Extreme corkscrew slide



EXTRA FUN ADD-ONS AVAILABLE:



SKY LOFT WITH CANOPY ROOF



WOOD ROOF



NINJA TRAINING KIT



DUAL MONKEY BARS

SEE ALL OPTIONS STARTING ON PAGE 42

Premier Series

- Thicker Beams
- Extra Long Swing Beam
- Greater Headroom
- Beefier Ladder and A-frame Legs
- Wider Play Deck Boards
- Framed Rockwall
- Larger Commercial Grade Hardware

EXTREME FORT

50% Bigger Play Deck

ALL EXTREME FORTS INCLUDE:

- 3-position swing beam
- 2 belt swings
- 1 rope with disc swing
- Accessory arm with trapeze bar
- Heavy-duty canopy roof
- Rock wall with climbing rope
- Step ladder with handrails
- Grip-n-go bar
- Binoculars
- Ship's wheel
- Safety handles
- Extreme super ride slide

7' Head Room

7.5' Play Deck Height

15' Slide

10.5' High Swing Beam

32a EXTREME FORT COMBO 2 — L 21' x W 23.5' x H 14.5'

For safety's sake, install your play system on a resilient surface and allow a 6 foot play perimeter around the entire surface.

Play Deck Height: **7.5'** | Headroom: **7'** | Play Deck Size: **5' x 7.5'** | Slide Length: **15'** | Swing Beam Height: **10.5'**

EXTREME FORTS

EXTREME FORT

50% Bigger Play Decks

33a Extreme Fort Combo 2
L 21′ x W 23.5′ x H 14.5′

ADD-ONS INCLUDED:
- Multi-Purpose Picnic Table



33b Extreme Fort Double Trouble
L 21′ x W 23.5′ x H 14.5′

ADD-ONS INCLUDED:
- Second extreme super ride slide
- Multi-Purpose Picnic Table



33c Extreme Fort Hangout
L 21′ x W 23.5′ x H 14.5′

ADD-ONS INCLUDED:
- Wood roof (replaces canopy)
- Café table
- Lower level playhouse with floor



33d Extreme Fort Combo 3
L 21′ x W 23.5′ x H 14.5′

ADD-ONS INCLUDED:
- Monkey bars
- Multi-Purpose Picnic Table



33e Extreme Fort Combo 4
L 21′ x W 23.5′ x H 15′

ADD-ONS INCLUDED:
- Monkey bars
- Sky loft XL with canopy roof
- Multi-Purpose Picnic Table



33f Extreme Fort Combo 5
L 23′ x W 23.5′ x H 15′

ADD-ONS INCLUDED:
- Monkey bars
- Sky loft XL with canopy roof
- Extreme corkscrew slide
- Multi-Purpose Picnic Table



EXTRA FUN
ADD-ONS AVAILABLE:



SKY LOFT WITH CANOPY ROOF



SKY DREAMER SWING



LOWER LEVEL ENCLOSURE
includes floor and entry door



SKY LOUNGE WITH TOWER KIT

SEE ALL OPTIONS
STARTING ON PAGE 42

Premier Series

- Thicker Beams
- Extra Long Swing Beam
- Greater Headroom
- Beefier Ladder and A-frame Legs
- Wider Play Deck Boards
- Framed Rockwall
- Larger Commercial Grade Hardware

EXTREME PLAYCENTER

50% Bigger Play Deck

ALL EXTREME PLAYCENTERS INCLUDE:

- 3-position swing beam
- 2 belt swings
- 1 rope with disc swing
- Accessory arm with trapeze bar
- Heavy-duty canopy roof
- Step/chain ladder with handrails
- Rock wall with rope
- Rope ladder
- 360° tire swing
- Grip-n-go bar
- Binoculars
- Ship's wheel
- Safety handles
- Extreme super ride slide



34a EXTREME PLAYCENTER COMBO 2 — L 28′ x W 17′ x H 14.5′

For safety's sake, install your play system on a resilient surface and allow a 6 foot play perimeter around the entire surface.

Play Deck Height: **7.5′** | Headroom: **7′** | Play Deck Size: **5′ x 7.5′** | Slide Length: **15′** | Swing Beam Height: **10.5′**

EXTREME PLAYCENTER

50% Bigger Play Decks

35a Extreme Playcenter Combo 2

L 28′ x W 17′ x H 14.5′



35b Extreme Playcenter Combo 2 with Wood Roof

L 28′ x W 17′ x H 14.5′

ADD-ONS INCLUDED:
- Wood roof (replaces canopy)



35c Extreme Playcenter Combo 3

L 28′ x W 17′ x H 14.5′

ADD-ONS INCLUDED:
- Monkey bars



35d Extreme Playcenter Combo 4

L 28′ x W 17′ x H 15′

ADD-ONS INCLUDED:
- Monkey bars
- XL sky loft with canopy roof
- 360° day dream swing



35e Extreme Playcenter Combo 5

L 28′ x W 19′ x H 15′

ADD-ONS INCLUDED:
- Monkey bars
- XL sky loft with canopy roof
- 360° day dream swing
- Extreme corkscrew slide



35f Extreme Playcenter Double Trouble

L 28′ x W 17′ x H 14.5′

ADD-ONS INCLUDED:
- Second extreme super ride slide



EXTRA FUN
ADD-ONS AVAILABLE:



WOOD ROOF



DUAL MONKEY BARS



NINJA TRAINING KIT



XL SKY LOUNGE WITH CANOPY

SEE ALL OPTIONS
STARTING ON PAGE 42

Mega Series

You dream it, we deliver it!

SUPREME DUAL TRIPLE SHOT INCLUDES:

- 3-position swing beam
- 2 belt swings
- 1 rope with disc swing
- Accessory arm with trapeze bar
- Wood roof
- 2 rock walls with rope
- Step ladder with handrails
- Rope ladder
- Step/chain ladder with handrails
- Heavy-duty canopy roof
- 3 Supreme super ride slides
- Multi-purpose picnic table
- Safety handles
- 2 grip-n-go bars
- Bridge
- 360° tire swing
- 2 Binoculars
- 2 Ship's wheel



36a Supreme Dual Triple Shot — L 38′ x W 19′ x H 13.5′

For safety's sake, install your play system on a resilient surface and allow a 6 foot play perimeter around the entire surface.



37a Original Double Zinger

L 32′ x W 16′ x H 11′

- 3-position swing beam
- 2 belt swings
- Accessory arm with trapeze bar
- Heavy-duty canopy roof
- 2 Rock walls with rope
- Rope ladder
- Step ladder with handrails
- Trapeze bar
- Step/rung ladder with handrails
- 360° tire swing
- Wood roof
- Multi-purpose picnic table
- Crawl tunnel
- 2 Ship's wheel
- Safety handle
- 2 original wave slides



37b Original Fort High Roller

L 20′ x W 18′ x H 14.5′

- 3-position swing beam
- 2 belt swings
- Trapeze bar
- Heavy-duty canopy roof
- Rock wall with rope
- Step ladder with handrails
- Lower level playhouse with floor
- Café table
- Tic-tac-toe panel
- Chalkboard panel
- Ship's wheel
- Safety handles
- Sky loft with canopy roof
- Original wave slides
- Extreme corkscrew slide

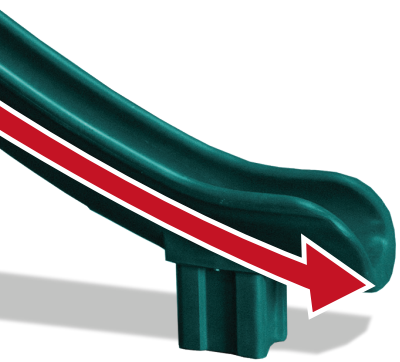



37c Turbo Deluxe Triple Shot

L 23′ x W 27′ x H 15′

- 3-position swing beam
- 2 belt swings
- Trapeze bar
- 2 wood roofs
- Multi-purpose picnic table
- Lower level playhouse with floor
- Café table
- Rock wall with rope
- 2 step ladders with handrails
- Deluxe monkey bars
- Sky loft with wood roof
- Wood bridge
- 2 ship's wheels
- Safety handles
- Loft step
- 3 turbo slides



38a Turbo Deluxe Dual Swing-o-Saurus

L 35′ x W 18′ x H 12.5′

- 3-position swing beam
- 3 belt swings
- Accessory arm with trapeze bar
- Wood roof
- 2 rock wall with rope
- Upper level enclosure
- Step ladder with handrails
- Heavy-duty canopy roof
- Step/chain ladder with handrails
- 360° tire swing
- Grip-n-go bar
- Rope ladder
- Binoculars
- Safety handles
- 2 turbo slides

NEW

38b Turbo Deluxe Playcenter Super Combo 5

L 25′ x W 19′ x H 15′

- 3-position swing beam
- 2 belt swings
- 1 rope with disc swing
- Wood roof
- Rock wall with rope
- Rope ladder
- 360° tire swing
- Step/chain ladder with handrails
- Grip-n-go bar
- Binoculars
- Safety handles
- Extreme corkscrew slide
- Extreme super ride slide
- Dual monkey bars
- Sky lounge with wood roof





38c Deluxe Playcenter Amped Up

L 29′ x W 23′ x H 14.5′

- 3-position swing beam
- 2 belt swings
- 1 rope with disc swing
- Accessory arm with trapeze bar
- Heavy-duty canopy roof
- Rock wall with rope
- Rope ladder
- Step/chain ladder with handrails
- 360° tire swing
- Grip-n-go bar
- Binoculars
- Ship's wheel
- Safety handles
- Sky loft with canopy roof
- Original wave slide
- Extreme super ride slide



EXTREME DELUXE TUNNEL-O-FUN INCLUDES:

- 3-position swing beam
- 2 belt swings
- 1 rope with disc swing
- Accessory arm with trapeze bar
- Heavy-duty canopy roofs
- 2 rock walls with ropes
- Rope ladder
- Step ladder with handrails
- Step/chain ladder with handrails
- 360° tire swing
- Crawl tunnel
- Bridge
- Multi-purpose picnic table
- 2 grip-n-go bars
- 2 binoculars
- 2 ship's wheels
- Telescope
- Wood roof
- Extreme corkscrew slide
- Extreme space saver tube slide
- 2 extreme tube slides
- Original tube slide



39a Extreme Deluxe Tunnel-O-Fun — L 39′ x W 20′ x H 14.5′

For safety's sake, install your play system on a resilient surface and allow a 6 foot play perimeter around the entire surface.

Space Savers

Tight space or uneven yard?

Schedule a yard evaluation today.

Check out PlaygroundOne.com to find your local dealer.



ORIGINAL FORT JR. INCLUDES:

- Accessory arm with trapeze bar
- Heavy-duty canopy roof
- Rock wall with rope
- Step ladder with handrails
- Ship's wheel
- Safety handle
- Multi-purpose picnic table
- Original wave slide

40a Original Fort Jr. — L 8′ x W 16′ x H 11′

For safety's sake, install your play system on a resilient surface and allow a 6 foot play perimeter around the entire surface.

41a Original Fort with 2 Position Swing Beam

L 15.5′ x W 16′ x H 11′

- 2-position swing beam
- 2 belt swings
- Heavy-duty canopy roof
- Rock wall with rope
- Step ladder with handrails
- Ship's wheel
- Safety handles
- Multi-purpose picnic table
- Original wave slide



NEW

41b Original Fort Spacesaver

L 15′ x W 16′ x H 11′

- 3-position swing beam
- 2 belt swings
- 1 trapeze
- Heavy-duty canopy roof
- Rock wall with rope
- Step ladder with handrails
- Ship's wheel
- Safety handles
- Multi-purpose picnic table
- Original wave slide



41c Deluxe Fort with 2 Position Swing Beam

L 18′ x W 17′ x H 12′

- 2-position swing beam
- 2 belt swings
- Accessory arm with trapeze bar
- Heavy-duty canopy roof
- Rock wall with rope
- Step ladder with handrails
- Ship's wheel
- Safety handles
- Original wave slide



41d Original Playcenter Double Swing Arm

L 15′ x W 12′ x H 11′

- Double accessory arm
- 1 belt swing
- 1 trapeze
- Heavy-duty canopy roof
- Rock wall with rope
- Step/rung ladder with handrails
- Ship's wheel
- Safety handles
- Rope ladder
- 360° tire swing
- Original wave slide



41e Original Playcenter with 2 Position Swing Beam

L 19.5′ x W 12′ x H 11′

- 2- position swing beam
- 2 belt swings
- Accessory arm with trapeze bar
- Heavy-duty canopy roof
- Rock wall with rope
- Step/rung ladder with handrails
- Ship's wheel
- Safety handle
- Rope ladder
- 360° tire swing
- Original wave slide



41f Deluxe Playcenter Double Swing Arm

L 16′ x W 12.5′ x H 12′

- Double accessory arm
- 1 belt swing
- 1 trapeze bar
- Heavy-duty canopy roof
- Rock wall with rope
- Step/chain ladder with handrails
- Ship's wheel
- Safety handles
- Rope ladder
- 360° tire swing
- Original wave slide



EXTRA FUN
ADD-ONS AVAILABLE:



DELUXE RAMP



WOOD ROOF



LOWER LEVEL ENCLOSURE
includes floor and entry door



HAND CRANK SPOTLIGHT



TIC-TAC-TOE PANEL

SEE ALL OPTIONS
STARTING ON PAGE 42


Add More Fun!
Swings


Add Ons


Accessories


Slides

Swings



Ductile Swing Hangers — 1 pair



Day Dreamer Swing (24″)



Available with green or yellow chain

360° Day Dreamer Swing (40″)



Day Dreamer Tree Swing (40″)



Sky Dreamer Swing



Available in green or yellow

360° Trapeze Bar



Available in green or yellow

Buoy Ball with or without Rope



Trapeze Bar with Buoy Ball



Available in green or blue

Belt Swing



Available with green or yellow chain

4 Chain Tire Swing



Available with green or yellow chain

2 Chain Tire Swing



Available with green or yellow chain

3 Chain Tire Swing

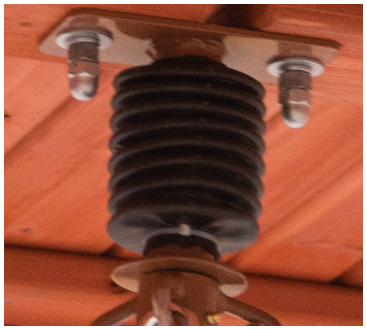

360° Heavy-duty Tire Swivel



Available in green, blue, or yellow

Full Bucket Swing



Pirate's Boat



Available in green or yellow

Disc with or without Rope



Available in green or yellow

Rope



Adirondack Chair Swing



Adirondack Bench Swing



Available in green or yellow

Deluxe Glider Swing

Add Ons



Available in green, or blue & yellow

Sky Lounge with Tower Kit



Available for Forts & Playcenters

Wood Roof



Available for Forts & Playcenters

XL Play Deck



Upper Level Enclosure



Available in green or yellow

Entry Ladder



Available in green, or blue & yellow

XL Sky Lounge with Canopy



Sky Lounge with Wood Roof



Available in green, or blue & yellow

Sky Loft with Canopy



Available in green, or blue & yellow

XL Sky Loft with Canopy



Includes floor & entry door

Lower Level Enclosure



Multi-Purpose Picnic Table



Café Side Table



Bridge (6′ and 10′)



Available in green or yellow

Crawl Tunnel (6′ and 10′)



Available with green, or blue & yellow rocks

Rock Wall



Available in green or yellow rope

Deluxe Ramp



Available in green or yellow rungs & handles

Monkey Bars



Available in green or yellow rungs & handles

Dual Monkey Bars



Ground Lounge/Enclosed Sky Lounge with Wood Roof

Slides

All Slides Available in YELLOW or GREEN



5′ play deck height

Original Wave Slide



5.5′ play deck height

Turbo Slide



8.5′ play deck height

Extreme Corkscrew Slide



6.5′ play deck height

Supreme Super Ride Slide



7.5′ play deck height

Extreme Super Ride Slide

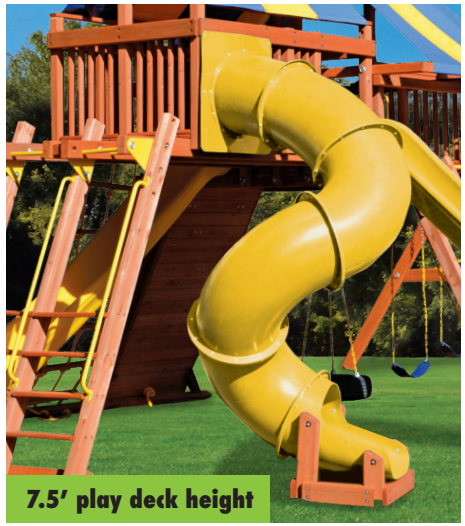

7.5′ play deck height

Extreme Corkscrew Slide



5′ play deck height

Original Straight Tube Slide



5.5′ play deck height

Turbo Straight Tube Slide



7.5′ play deck height

Extreme Straight Tube Slide



5′ play deck height

Original Space Saver Tube Slide



5.5′ play deck height

Turbo Space Saver Tube Slide



7.5′ play deck height

Extreme Space Saver Tube Slide

Accessories



Tic-Tac-Toe Panel



Available in green or yellow

Bubble Panel



Available in green or yellow

Extended Bubble Panel



Available in green or yellow

Fireman's Pole



Available in green or blue

Ship's Wheel (12")



Available in green or blue

Deluxe Ships Wheel (19")



Periscope



Available in green or blue

Binoculars



Available in green, or blue & yellow

Rocks for Rock Wall



Available in green or blue

Hand Crank Spotlight



Available in green or blue

Telescope

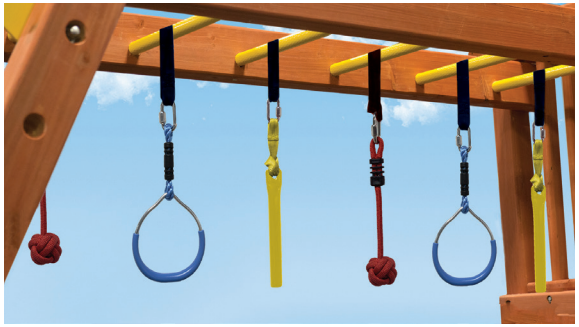

Ninja Training Kit



Chalkboard Panel



Available in green or blue

Mega Phone



Available in green or yellow

15" Safety Handles Flat Tab



Available in green or yellow

Grip-n-go Bar

Peace of Mind Warranty

Our warranties are the Most Comprehensive in the industry. No strings Attached, no fine print. See PlaygroundOne.com for complete warranty detail.



Available in green or yellow

41" Safety Handles Flat Tab



Available in green and yellow

Arched Safety Step





Available in green or yellow

44" Safety Handles U-Tab



Wood Stain



Available in green or yellow

66" Safety Handles Flat Tab

Our **Expandable** and **Customizable** playsets allow you to create the unique experience your children want.



Available in green or brown

Rubber Wear Mat



Rubber Play Pit Timber



PLAYGROUND One!®

www.PlaygroundOne.com

2025PG1V2